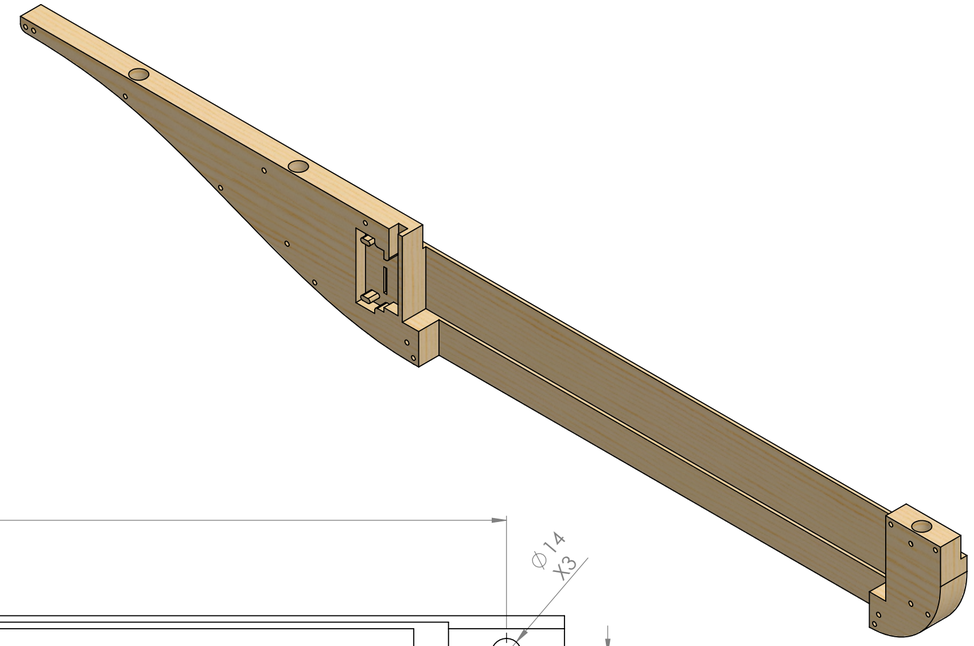

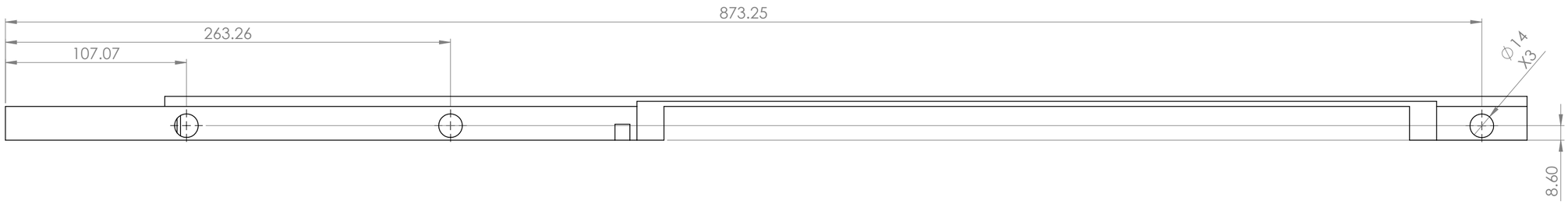

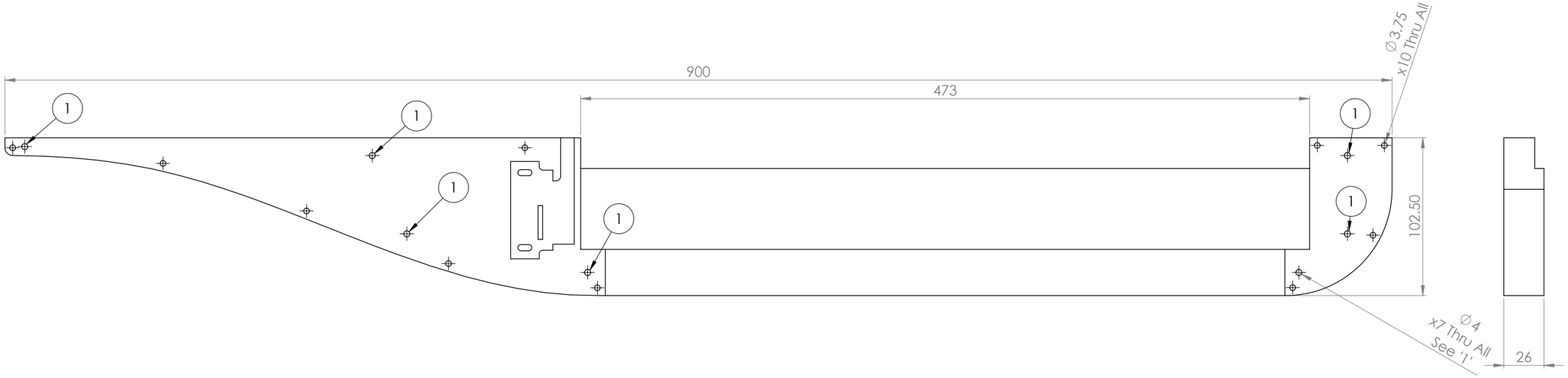

UNLESS OTHERWISE SPECIFIED: DIMENSIONS ARE IN MILLIMETERS SURFACE FINISH: TOLERANCES: LINEAR: ANGULAR:	FINISH:		DEBURR AND BREAK SHARP EDGES	DO NOT SCALE DRAWING	REVISION
	NAME	SIGNATURE	DATE	TITLE: PLY Wood Keyboard Sides	
DRAWN	Chris Paton		Chris Pator		
CHK'D					
APPV'D					
MFG					
Q.A				MATERIAL: PLY Wood	DWG NO. PT-6-1 A2
				WEIGHT:	SCALE:1:5 SHEET 1 OF 1