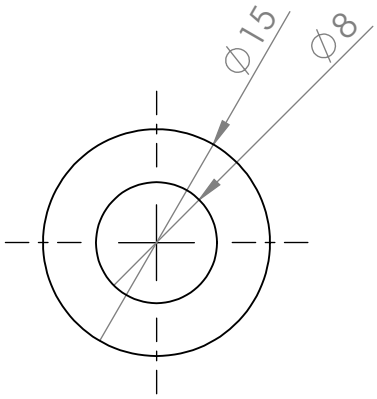

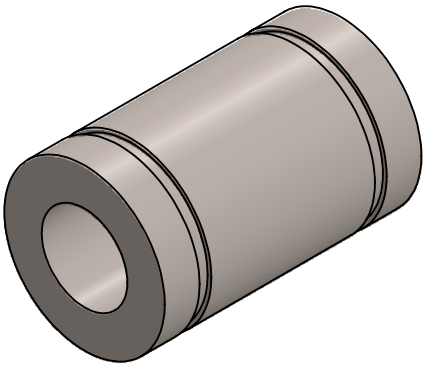

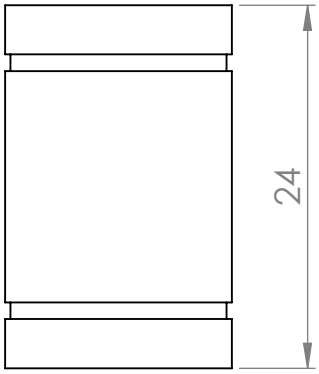

UNLESS OTHERWISE SPECIFIED: DIMENSIONS ARE IN MILLIMETERS SURFACE FINISH: TOLERANCES: LINEAR: ANGULAR:	FINISH:	DEBURR AND BREAK SHARP EDGES	DO NOT SCALE DRAWING / REVISION

	NAME	SIGNATURE	DATE
DRAWN	Chris Paton		11/8/2016
CHK'D			
APPV'D			
MFG			
Q.A			

TITLE:

LM008U Bearing

MATERIAL: High carbon bearing steel

DWG NO. PT-3-5

A4

WEIGHT:

SCALE:2:1

SHEET 1 OF 1