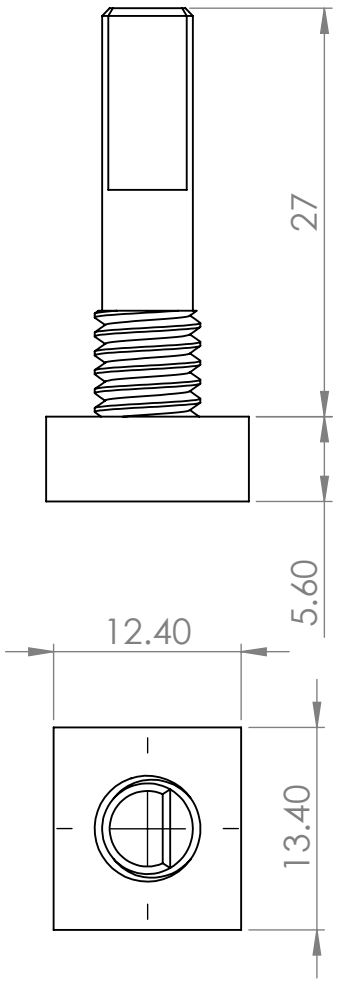

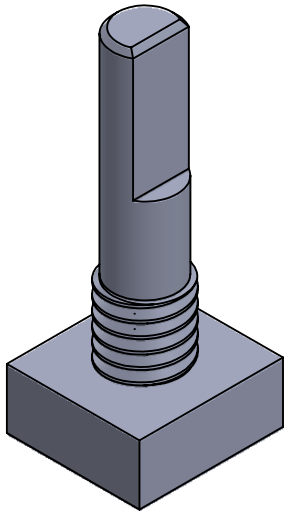

UNLESS OTHERWISE SPECIFIED: DIMENSIONS ARE IN MILLIMETERS SURFACE FINISH: TOLERANCES: LINEAR: ANGULAR:	FINISH:			DEBURR AND BREAK SHARP EDGES	DO NOT SCALE DRAWING	REVISION
	NAME	SIGNATURE	DATE		TITLE: Potentionmeter	
DRAWN	Chris Paton		11/8/2016			
CHK'D						
APPV'D						
MFG						
Q.A				MATERIAL:	DWG NO. PT-3-8	A4
				WEIGHT:	SCALE:2:1	SHEET 1 OF 1